Front View with 48” Long Powered Magazine and 8’ Long Tabletop Conveyor

FEATURES & BENEFITS:

- Versatile standard design allows the *SideWinder*™ to be supplied as **a stand-alone machine,** provided with a conveyor, **or fit over an existing line**.
- MGS’ standard rotary motion is a proven design that **creates a clean and simple picking motion and has years of field-tested experience**.
- Clean GMP design **eliminates the possibility of lost outserts in the machine and reduces time spent in outsert count validation.**
- Easy-to-load horizontal powered magazine **means a lower, more ergonomic magazine load height**.
- Open station prior to outsert placement **allows for additional functions, such as bar code scanning. This capability can greatly reduce waste and rework**.
- Many options available such as various styles of bottle metering devices, **allowing the end user to customize the machine to their specific needs**.

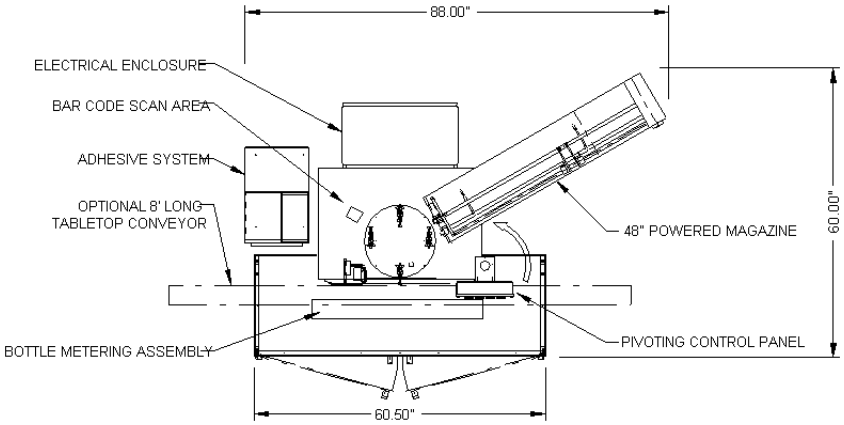

TYPICAL UTILITY REQUIREMENTS:
ELECTRICAL: 230 VAC, 3 Ph, 50/60 Hz
SideWinder: 15 Amps Max
Glue System: 17 Amps Max
AIR: 80 PSI Filter and Regulator Provided
VACUUM: Up To 10 SCFM At 20" HG
(if optional pump is not purchased)

MAXIMUM SPEEDS:
- Up to 120 BPM Random Cycle Mode
- Up to 250 BPM Continuous Mode

PRODUCT SIZE RANGE:
Outserts:
- Minimum: 1.13" L x 1.13" H x .03" Thick
- Maximum: 2.75" L x 4" H x .38" Thick

Target (Bottles or Cartons):
- Minimum: 1.25" A x 1.25" P x 2.63" H
- Maximum: 4" A x 4" P x 8" H

(A = *Across Conveyor* P = *Parallel to Flow*)

OPTIONS AVAILABLE:
- Machine Orientation
- Powered Magazine – many lengths available
- Low Level Magazine Sensor
- Tabletop Conveyor
- Timing Screw Indexer
- Bottle Turning Modules
- Other Drive Options
- Venturi Vacuum System
- Vacuum Pump
- Floor Stand
- Screw Height Adjustment
- Casters
- Upstream/Downstream Surge Sensors
- No Product No Placement
- Missed Detection System with or without buzzer
- Bar Code Scanner
- Outsert Presence Detection
- Product Reject Station with Reject Verification